**解析后的地址没有失效期，为避免丢失，请自行收藏网址！**
**后续也可以直接访问 代下牛 www.daixianiu.cn 自助解析！**

# 电路笔记（通信模块): 基于ESP32-S3实现的XVC(Xilinx Virtual Cable) JTAG下载器硬件

本文链接：https://blog.csdn.net/ResumeProject/article/details/145166608

## 目录

项目配置
测试服务地址
连接ESP32-S3和FPGA
连接XVC

## 项目配置

- 1. 安装并配置ARDUINO

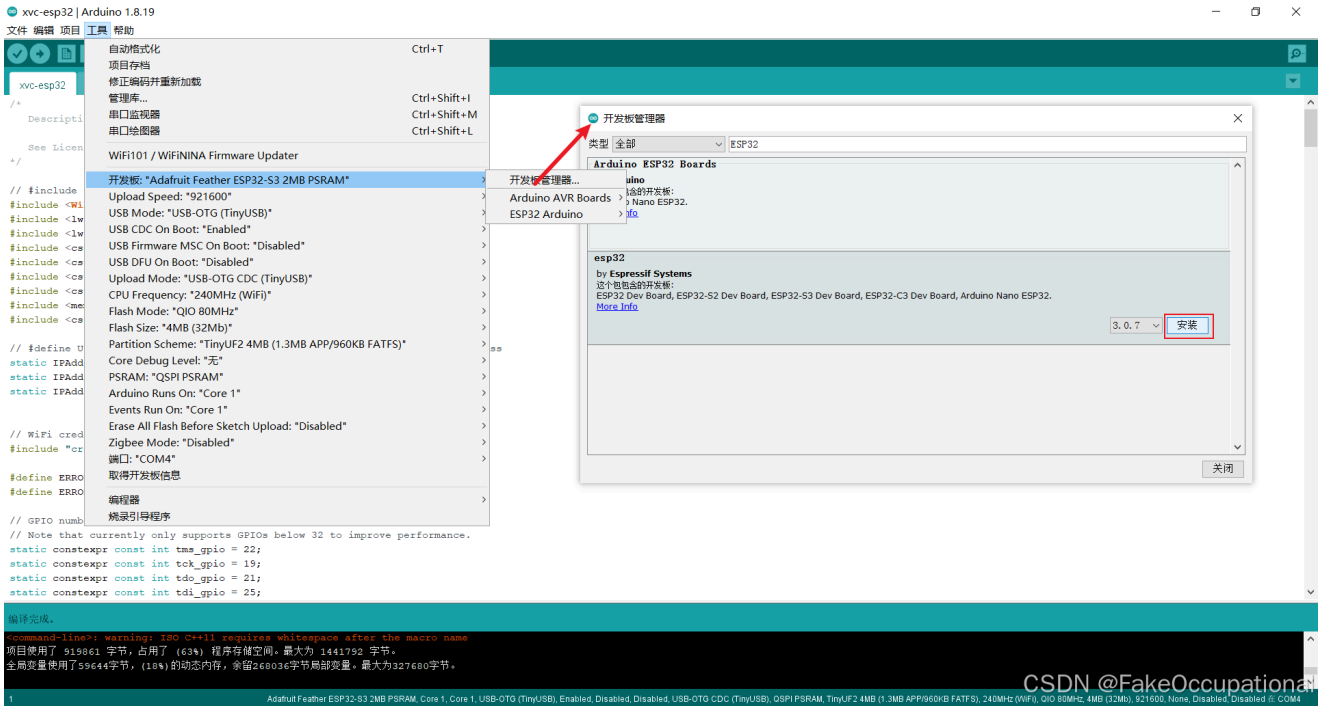


- 下载项目 https://github.com/kholia/xvc-esp32，并根据本地网络配置进行修改

文件 编辑 项目 工具 帮助

xvc-esp32 credentials.h

```
#include <cstdint>
#include <cstring>
#include <memory>
#include <cstdlib>

// #define USE_STATIC_IP // Un-comment this line to enable the static ip address
static IPAddress ip(192, 168, 1, 12); // Our address
static IPAddress gateway(192, 168, 1, 1);
static IPAddress netmask(255, 255, 255, 0);


// WiFi credentials
#include "credentials.h"

#define ERROR_JTAG_INIT_FAILED -1
#define ERROR_OK 1

// GPIO numbers for each signal. Negative values are invalid.
// Note that currently only supports GPIOs below 32 to improve performance.
static constexpr const int tms_gpio = 22;
static constexpr const int tck_gpio = 19;
static constexpr const int tdo_gpio = 21;
static constexpr const int tdi_gpio = 25;

// Transition delay coefficients
static const unsigned int jtag_delay = 10;  // NOTE!

static std::uint32_t jtag_xfer(std::uint_fast8_t n, std::uint32_t tms, std::uint32_t tdi)
{
  std::uint32_t tdo = 0;
  for (int i = 0; i < n; i++) {
    jtag_write(0, tms & 1, tdi & 1);
    tdo |= jtag_read() << i;
    jtag_write(1, tms & 1, tdi & 1);
    tms >>= 1;
```

上传成功。

```
Leaving...
Hard resetting via RTS pin...
```

19 - 20 Adafruit Feather ESP32-S3 2MB PSRAM, Core 1, Core 1, USB-OTG (TinyUSB), Enabled, Disabled, Disabled, USB-OTG CDC (TinyUSB), QSPI PSRAM, TinyUF2 4MB (1.3MB APP/960KB FATFS), 240MHz (WiFi), QIO 80MHz, 4MB (32Mb), 921600, None, Disabled, Disabled 在 COM4

CSDN @FakeOccupational

文件 编辑 项目 工具 帮助

xvc-esp32 credentials.h

```
  WaitingAPConnection,
  APConnected,
  ClientConnected,
};

static std::unique_ptr<XvcServer> server;

void loop()
{
  static AppState state = AppState::WaitingAPConnection;
  switch (state) {
    case AppState::WaitingAPConnection: {
        if (WiFi.isConnected()) {
          ESP_LOGI(TAG, "WiFi connection ready. IP: %s", WiFi.localIP().toString().c_str());
          state = AppState::APConnected;
        }
        break;
      }
    case AppState::APConnected: {
        if (!WiFi.isConnected()) {
          ESP_LOGI(TAG, "disconnected from WiFi.");
          server.release();
          state = AppState::WaitingAPConnection;
          break;
        }

        if (!server) {
          server.reset(new XvcServer(2542));
        }
        if (server) {
          server->run();
        }
        break;
      }
  }
```

上传成功。

```
Leaving...
Hard resetting via RTS pin...
```

35 Adafruit Feather ESP32-S3 2MB PSRAM, Core 1, Core 1, USB-OTG (TinyUSB), Enabled, Disabled, Disabled, USB-OTG CDC (TinyUSB), QSPI PSRAM, TinyUF2 4MB (1.3MB APP/960KB FATFS), 240MHz (WiFi), QIO 80MHz, 4MB (32Mb), 921600, None, Disabled, Disabled 在 COM4

CSDN @FakeOccupational

## 测试服务地址

```
$ for /L %i in (1,1,254) do @ping -n 1 -w 100 192.168.1.%i | find "TTL"
来自 192.168.1.1 的回复: 字节=32 时间=10ms TTL=64
来自 192.168.1.12 的回复: 字节=32 时间=10ms TTL=64
来自 192.168.1.14 的回复: 字节=32 时间=10ms TTL=64
来自 192.168.1.120 的回复: 字节=32 时间<1ms TTL=128
来自 192.168.1.121 的回复: 字节=32 时间=127ms TTL=64
$ ping 192.168.1.14
```

## 连接ESP32-S3和FPGA

- 根据代码中引脚的设置，连接对应的TMS,TCK,TDO,TDI引脚，ESP32-S3中引脚分布如下：

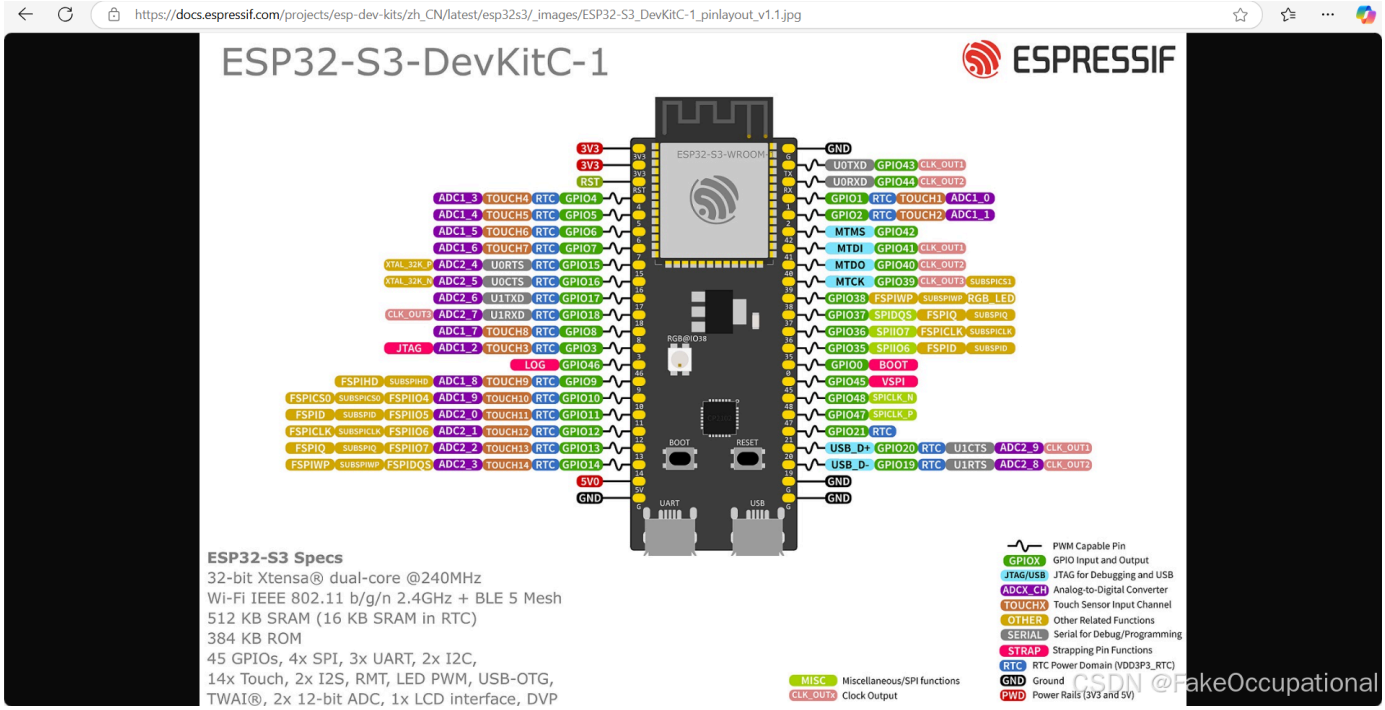


## 连接XVC

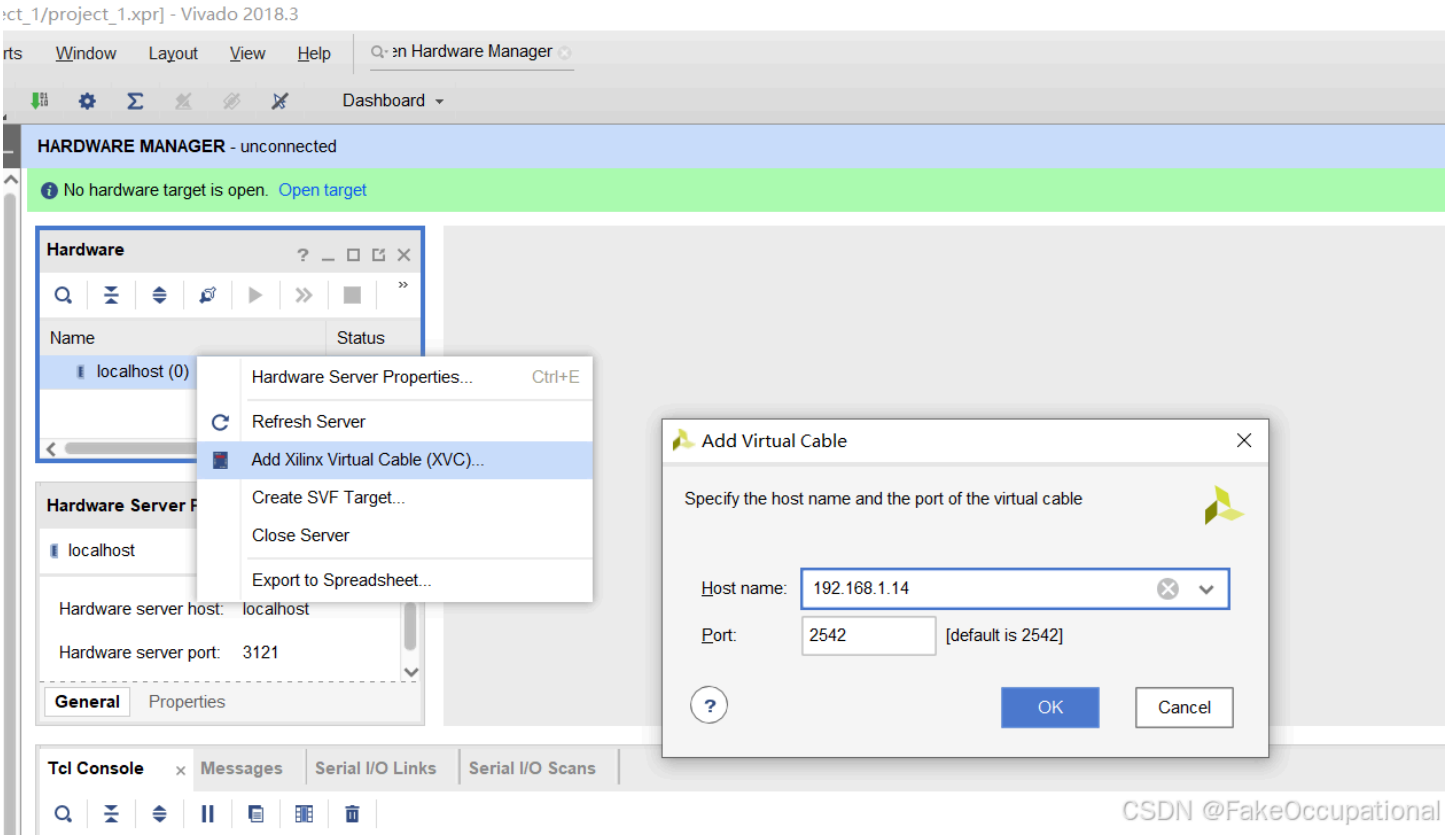
ct_1/project_1.xpr] - Vivado 2018.3
Window Layout View Help
Hardware Manager
Dashboard
HARDWARE MANAGER - unconnected
No hardware target is open. Open target
Hardware
Name
Status
localhost (0)
Hardware Server Properties... Ctrl+E
Refresh Server
Add Xilinx Virtual Cable (XVC)...
Create SVF Target...
Close Server
Export to Spreadsheet...
Hardware Server
localhost
Hardware server host: localhost
Hardware server port: 3121
General
Properties
Add Virtual Cable
Specify the host name and the port of the virtual cable
Host name: 192.168.1.14
Port: 2542
[default is 2542]
OK
Cancel
Tcl Console
Messages
Serial I/O Links
Serial I/O Scans
CSDN @FakeOccupational

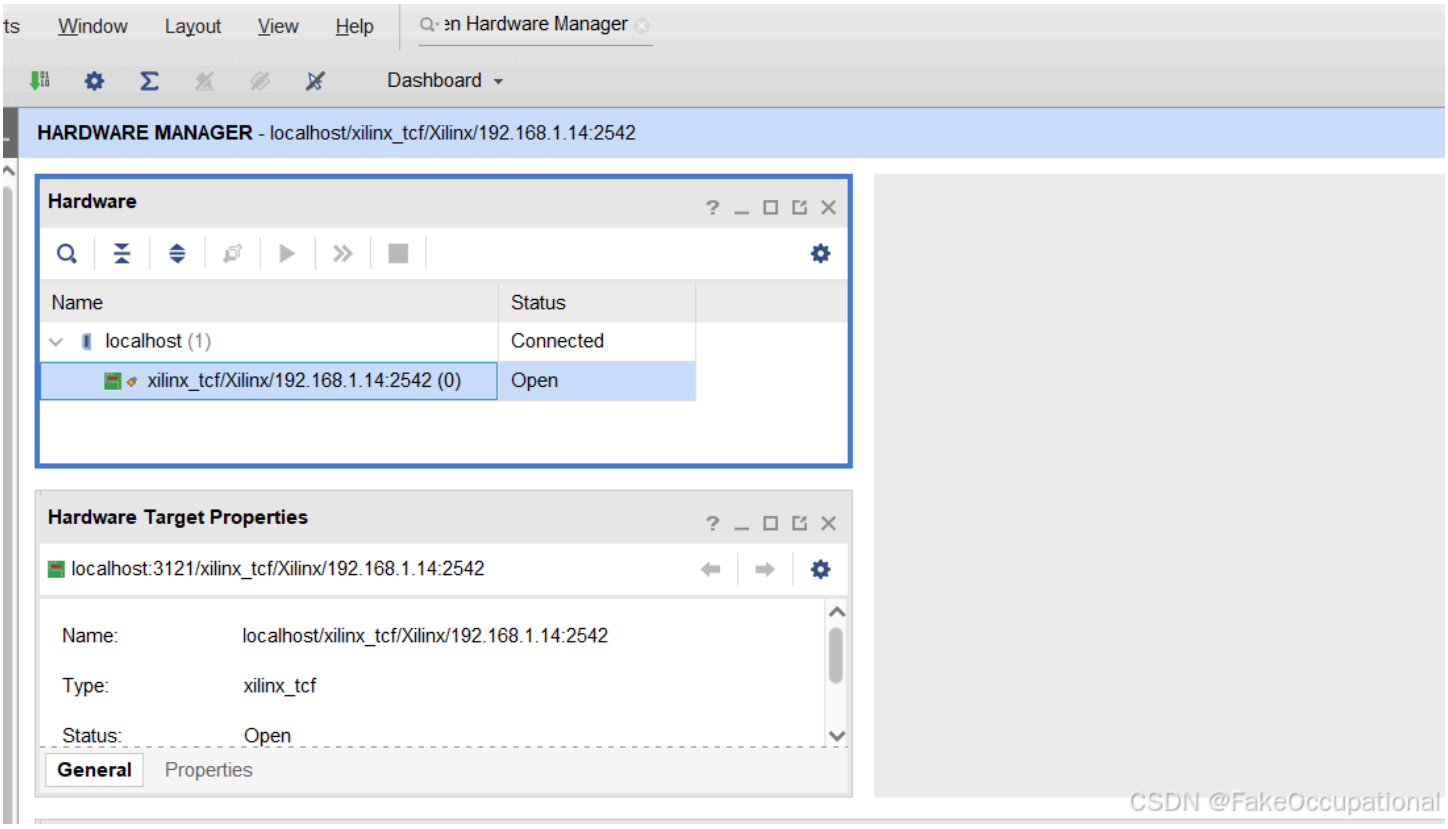
Window Layout View Help
Hardware Manager
Dashboard
HARDWARE MANAGER - localhost/xilinx_tcf/Xilinx/192.168.1.14:2542
Hardware
Name
Status
localhost (1)
Connected
xilinx_tcf/Xilinx/192.168.1.14:2542 (0)
Open
Hardware Target Properties
localhost:3121/xilinx_tcf/Xilinx/192.168.1.14:2542
Name: localhost/xilinx_tcf/Xilinx/192.168.1.14:2542
Type: xilinx_tcf
Status: Open
General
Properties
CSDN @FakeOccupational